SUNX

INSTRUCTION MANUAL

Exclusive Nozzle for ER-VS01

Shower Nozzle **ER-VAS** | Straight Bar Nozzle **ER-VAB□**

Thank you very much for using SUNX products. Please read this Instruction Manual carefully and thoroughly for the correct and optimum use of this product. Kindly keep this manual in a convenient place for quick reference.

1 OUTLINE

- This product is to fit in the nozzle mounting part of the ultra-compact ionizer spot type (**ER-VS01**) to convey the ionized air.

2 SPECIFICATIONS

Designation	Model No.	Description		Material	Supplied air pressure range (Note)	Applicable attachment color
Shower nozzle	**ER-VAS**	Nozzle without pipe.		Stainless steel	0.05 to 0.4MPa	White
Straight bar nozzle	**ER-VAB020**	Charge removal area 200mm	Bar type nozzle having holes.			Black
	ER-VAB032	Charge removal area 320mm				
	ER-VAB065	Charge removal area 650mm				

Note: The supplied air pressure range is a specified value for the pressure applied to the nozzle.

3 MOUNTING

- On the ultra-compact ionizer spot type (**ER-VS01**), a protective film is affixed on the nozzle mounting part. Be sure to remove it before mounting the nozzle.
- The resin tube and the attachment are enclosed with the nozzle. Mount them as described below.

Procedure

① Insert the resin tube into the center of the shower nozzle (**ER-VAS**).
② Direct the the convex part of the center of the attachment towards you (See the figure below) and insert it into **ER-VS01**.
③ In the state of ①, insert them into the nozzle mounting part of **ER-VS01**.
④ Mount the nozzle into the nozzle mounting part of **ER-VS01**. The tightening torque should be 6N·m or less.

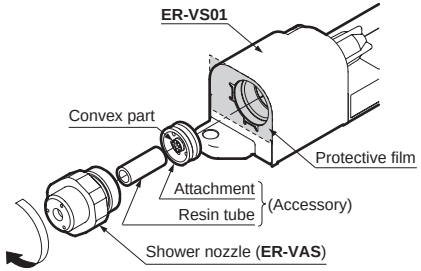

Note: Be sure to fit the resin tube and the attachment. When they are not fitted, the static removal capability remarkably deteriorates.

- The air-flow direction of the straight bar nozzle (**ER-VAB□**) can be adjusted, after mounting to **ER-VS01**, by loosening the tightening nut.
- The tightening torque after adjustment should be 6N·m or less.

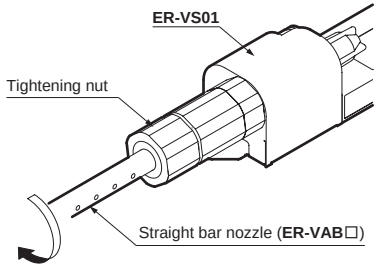

4 CAUTIONS

- Appropriate air pressure for each nozzle should be used.
- The static removal capability changes depending on the air pressure value. Apply appropriate air pressure for use.
- Do not cut the straight bar nozzle (**ER-VAB□**). The static removal capability gets unstable.
- Be sure to use the suitable attachment for each nozzle.

5 BAR NOZZLE HOLDER (Enclosed with ER-VAB□)

- When the straight bar nozzle (**ER-VAB□**) is used, fit the enclosed bar nozzle holder (**ER-VABH**) as shown in the figure below.
  The tightening torque of the M3 hexagon-socket-head bolt for bar nozzle fixing should be 0.6N·m or less.

Designation	Mode No.	Description	Material
Bar nozzle holder	**ER-VABH**	Exclusive for **ER-VAB□**. This can be used at the tip or middle of the nozzle.	Stainless steel

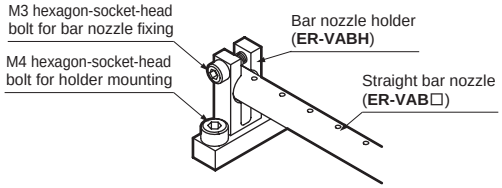

6 DIMENSIONS (Unit: mm)

- **ER-VAS / Shower nozzle**
  - **Mounting drawing with ER-VS01**

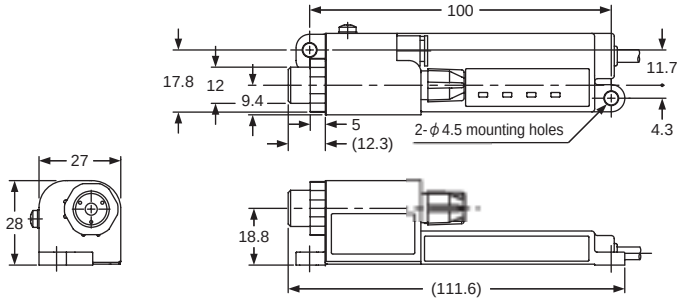

- **ER-VAB□ / Straight bar nozzle**
  - **Mounting drawing with ER-VS01**

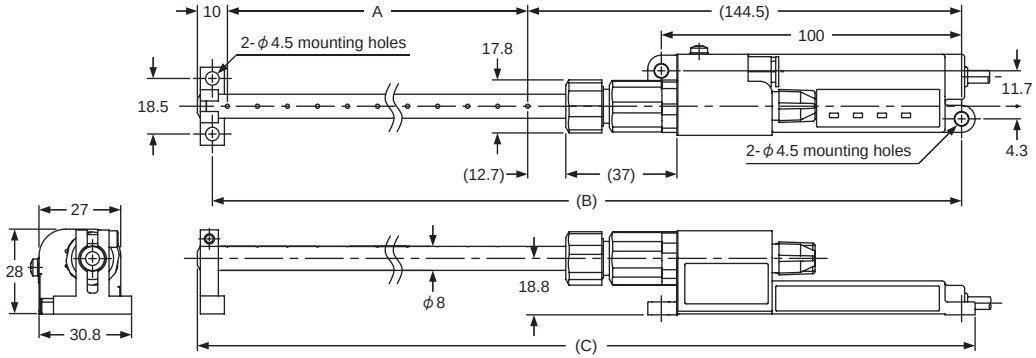

Model No.	A	B	C
ER-VAB020	200	349.5	359
ER-VAB032	320	469.5	479
ER-VAB065	650	799.5	809

SUNX Limited http://www.sunx.co.jp/

Head Office
2431-1 Ushiyama-cho, Kasugai-shi, Aichi, 486-0901, Japan
Phone: +81-(0)568-33-7211 FAX: +81-(0)568-33-2631
Overseas Sales Dept.
Phone: +81-(0)568-33-7861 FAX: +81-(0)568-33-8591

PRINTED IN JAPAN